miniBOOSTER®

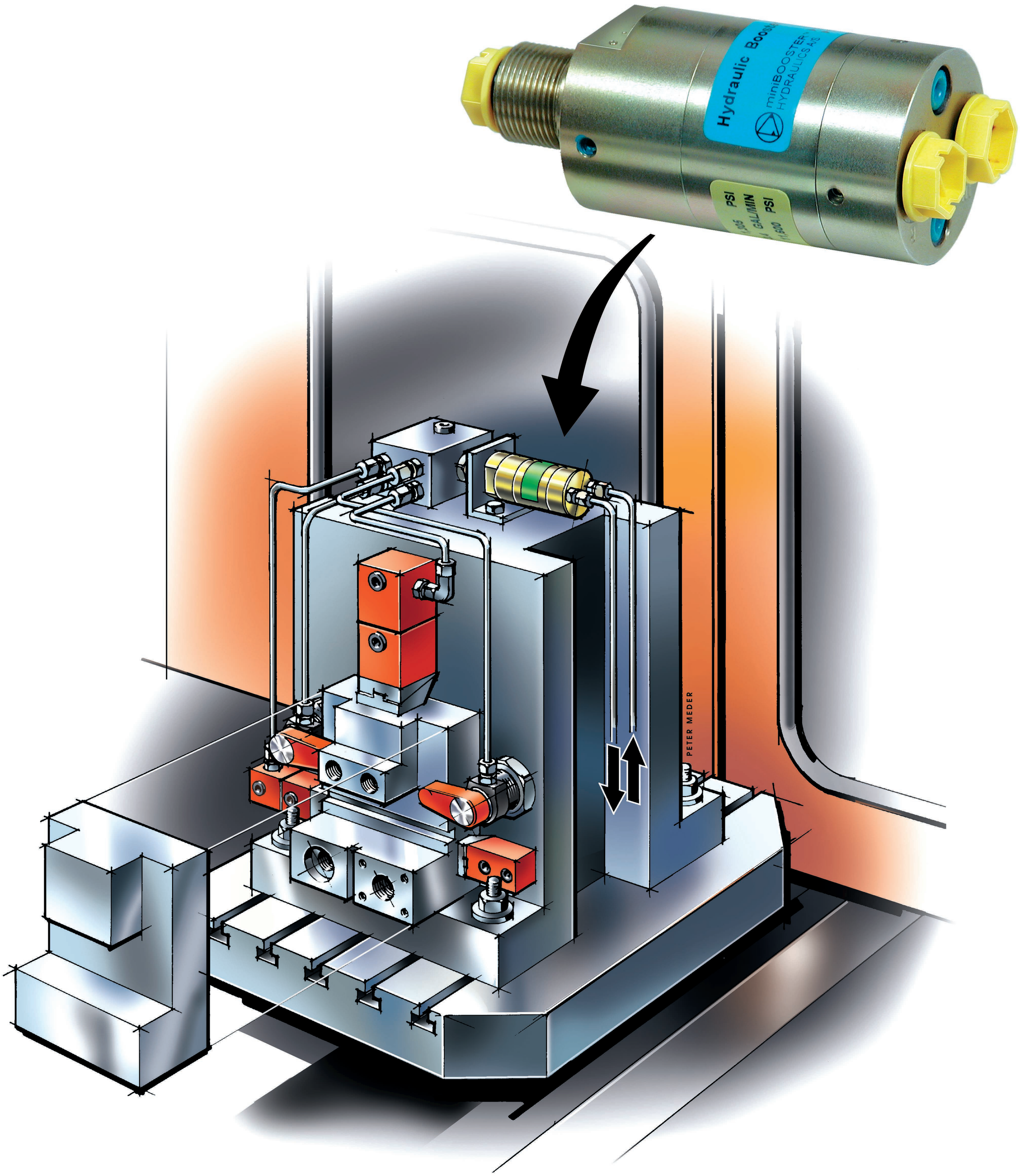

MINIMUM SIZE – MAXIMUM POWER