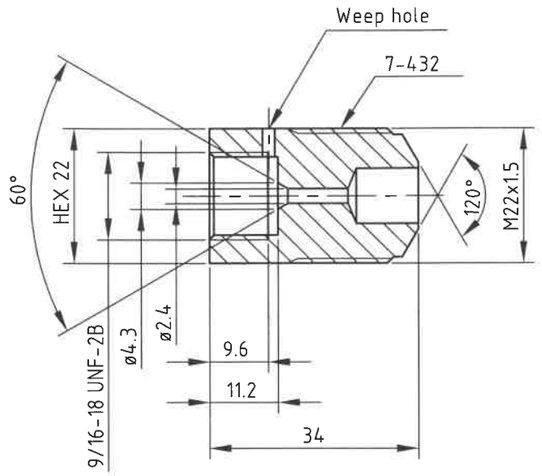

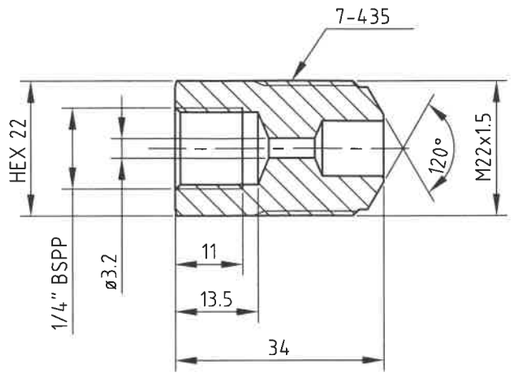

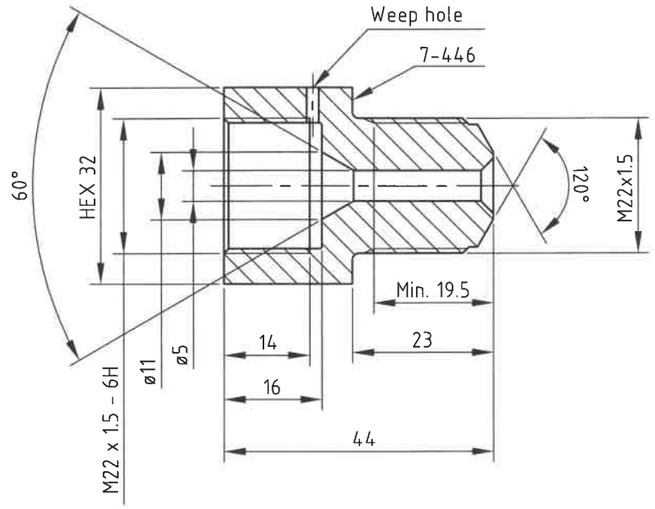

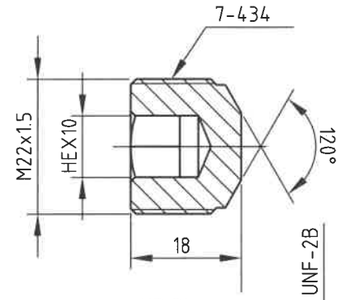

HP Plugs:

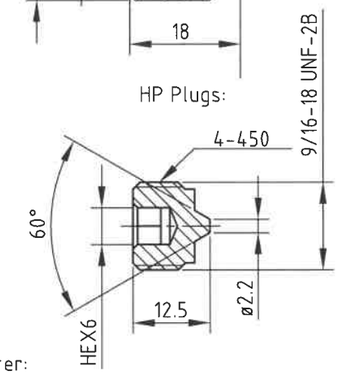

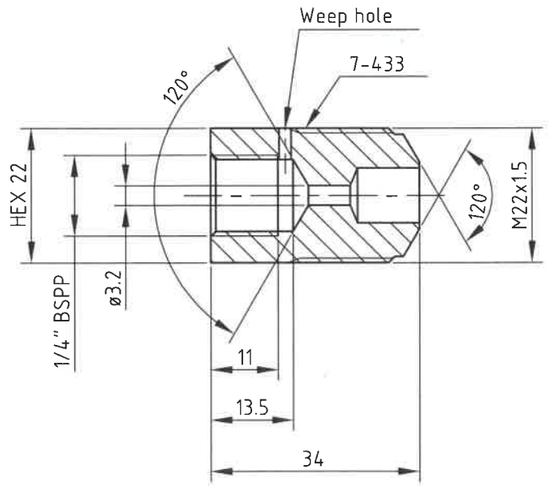

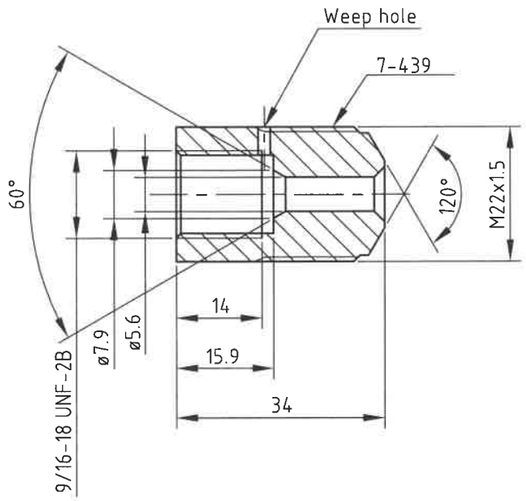

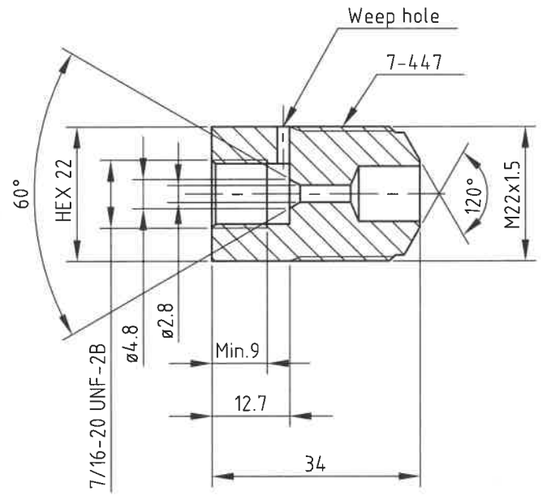

HP Adapter:

Ordering Code	HP Connection	Pressure max.
4-450	9/16-18 UNF	3.000 bar
7-432	9/16-18 UNF	3.000 bar
7-433	1/4" BSPP	3.000 bar
7-434	Plug	3.000 bar
7-435	1/4" BSPP	800 bar
7-439	9/16-18 UNF	1.380 bar
7-445	1/4" BSPP	3.000 bar
7-446	M22 x 1.5	3.000 bar
7-447	7/16-20 UNF	1.380 bar
7-838	1/4" NPT	1.035 bar

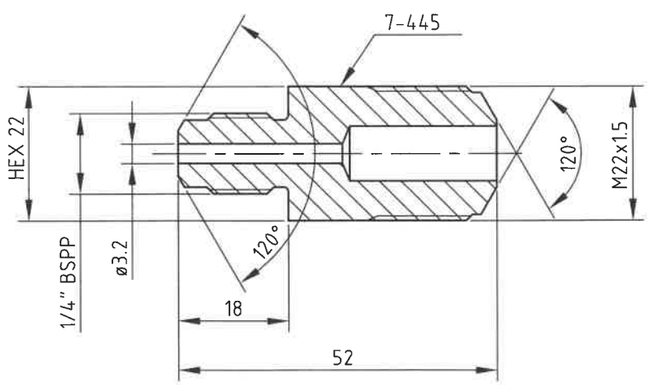

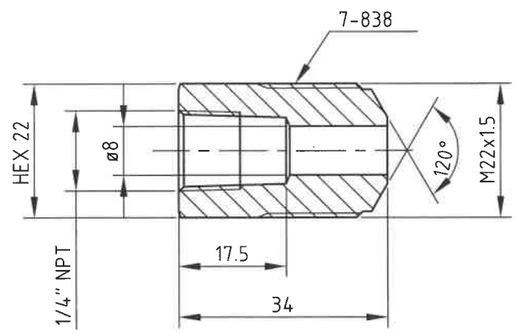

For all parts: Tightening Torque 180 Nm (M22x1.5)

Number	Designation	Material	Dimension	Issue	Matr. Code No.

Changes	Date	Name	Ext. dim.:-, Int. dim.:+, Distance.:±						Surface
7-447 added	22-05-2015	L.H.							
Max. P: 3.000 bar	06-04-2017	L.H.	Meas. -range	0-6	6-30	30-100	100-300	300-1000	Break all edges
4-450 added	27-08-2018	L.H.	2 dec. ,00	0.05	0.10	0.15	0.20	0.30	Hardening depth
7-838 added	08-10-2021	L.H.	1 dec. ,0	0.10	0.20	0.30	0.50	0.80	HV
80 Nm to 180 Nm	08-10-2021	L.H.	No dec.	0.30	0.50	0.80	1.20	2.00	

Replace		Scale	HC7 Adapter
Constr.	Leif Hansen	1:1	Connection Possibilities
Konf.			
Approb.			
Date	13-09-2009		

Confidential: Property of miniBOOSTER, HYDRAULICS A/S Denmark
Not to be handed over to, copied or used by third party.

miniBOOSTER® HYDRAULICS A/S

NO.: 7-900-08