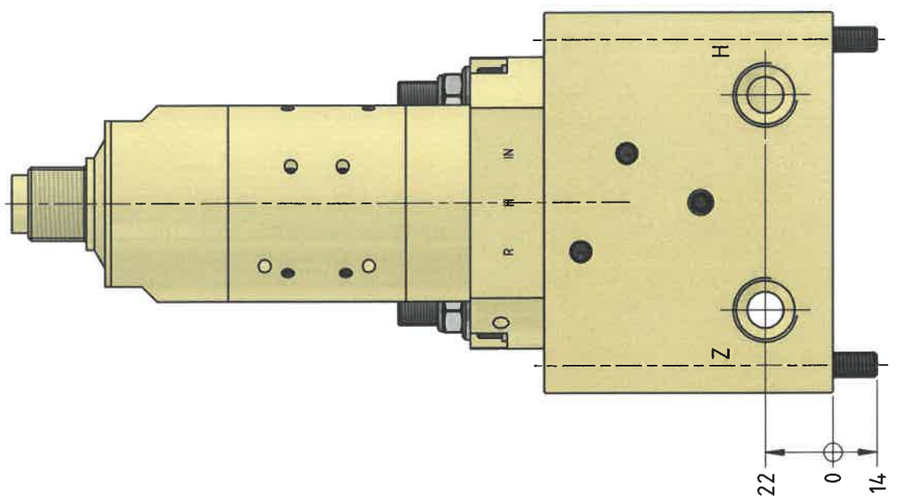

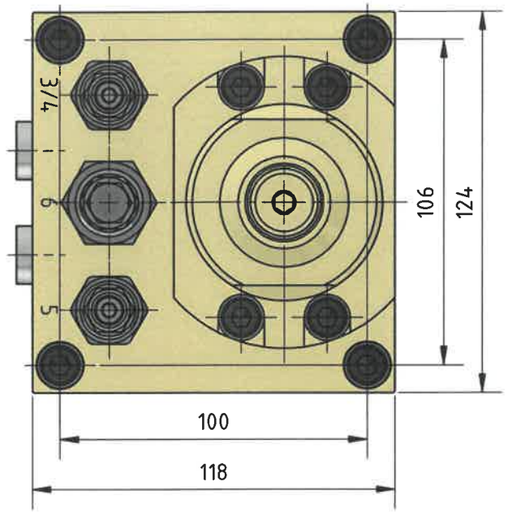

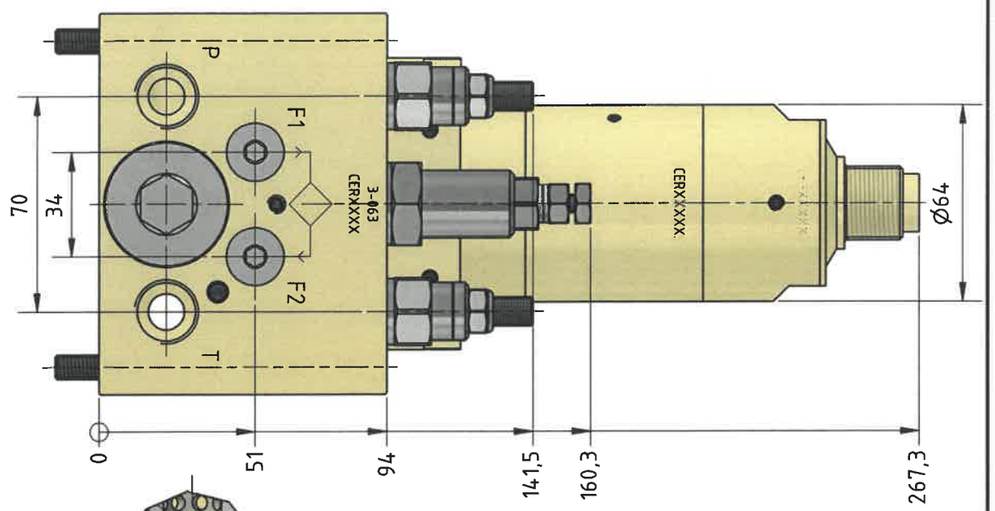

Manometer Connections:

MP: Pump Pressure

MH: Intensifier Outlet Pressure

M1: Intensifier Inlet Pressure

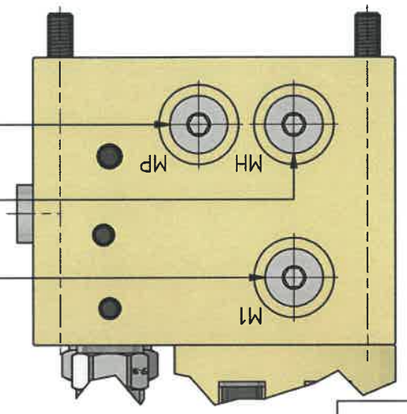

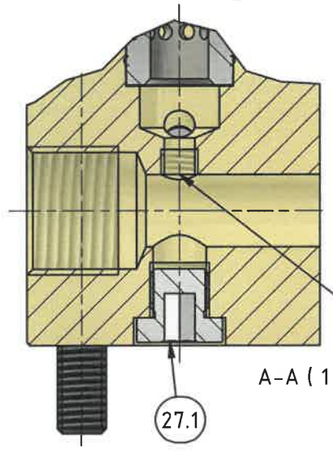

A-A (1 : 1)

Filter Installation Guide:

Plug installation position for bypass of oil to filter connection F1 & F2.

- Remove plug 12 from rest position
- Install plug 12 behind plug 27.1 in port connection FB
- Remove plugs 27.1 & 27.2 from port connections F1 & F2
- Install filter between port connections F1 & F2

Port Connections:

P, T, Z & H: 1/2" BSPP
F1, F2, M1, MP & MH: 1/4" BSPP
FB: 1/8" BSPP

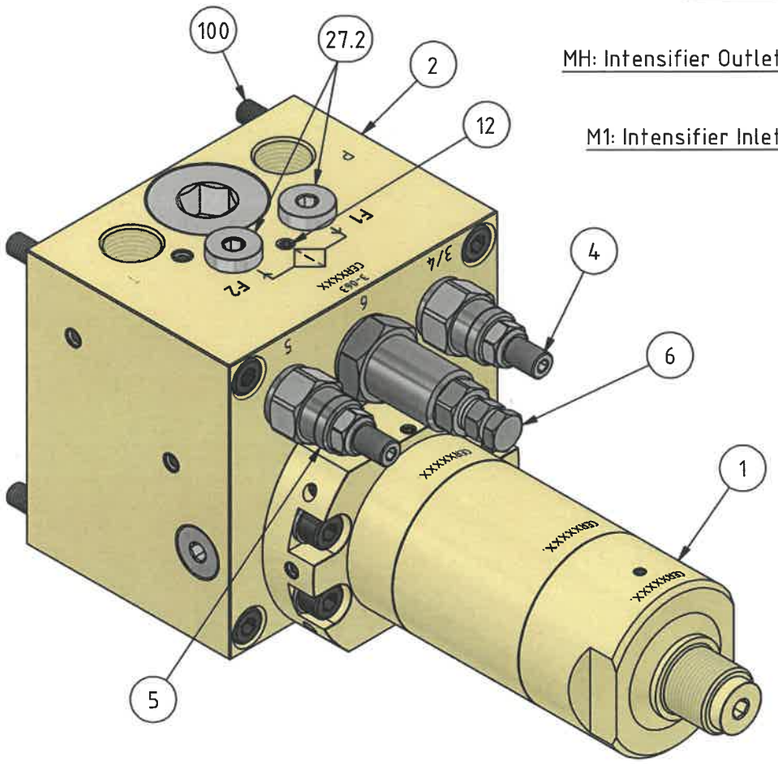

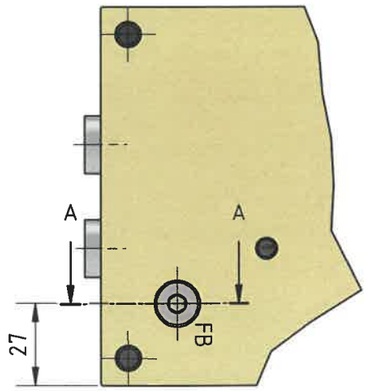

PARTS LIST

ITEM	QTY	PART NUMBER	DESCRIPTION	SW1	SW2
1	1	HC2D-__.__-__-D	Hydraulic Booster, Dual		
2	1	3-063	Manifold		
4	1	W-SP11A-30CL	Sequence Valve (10.5-420 bar)	22mm_7/8" ~ 47 Nm	Int. hex 4mm / 14.3mm
5	1	W-PB11A-30AL	Pressure Reducing Valve (7-210 bar)	22mm_7/8" ~ 47 Nm	Int. hex 4mm / 14.3mm
6	1	MVE 4 A	Relief Valve (0-700 bar)	27mm ~ 80 Nm	Slotted / 13mm
12	1	4-621	M6x6 DIN 913	Int. hex 3mm ~ 10 Nm	
100	4	3-615	Bolt M8x100 12,9 DIN 912	Int. hex 6mm ~ 38 Nm	
27.1	1	1-630	Plug 1/8" BSPP incl. seal	Int. hex 5mm ~ 15 Nm	
27.2	6	2-630	Plug 1/4" BSPP incl. seal	Int. hex 6mm ~ 30 Nm	

Material		Issue	Material Code No.
Changes Manifold replaced with 3-063	Date 03.08.2018	Name L.H.	Finish
Manifold updated inside	17-02-2023	L.H.	Break all edges
MVE 4 A valve (6) with hex head adj. screw	19-06-2024	PW	Hardening depth
			HV

Designer	Leif Hansen	Scale 1 : 2	M-HC2D-013-1L100	Confidential: Property of miniBOOSTER HYDRAULICS A/S Denmark Not to be handed over to, copied or used by third party. miniBOOSTER® HYDRAULICS A/S
Approved by		Format A3	Intensifier System	
Date	14-03-2016		Assembly Drawing	Drawing No.: M-HC2D-013-1L100-03