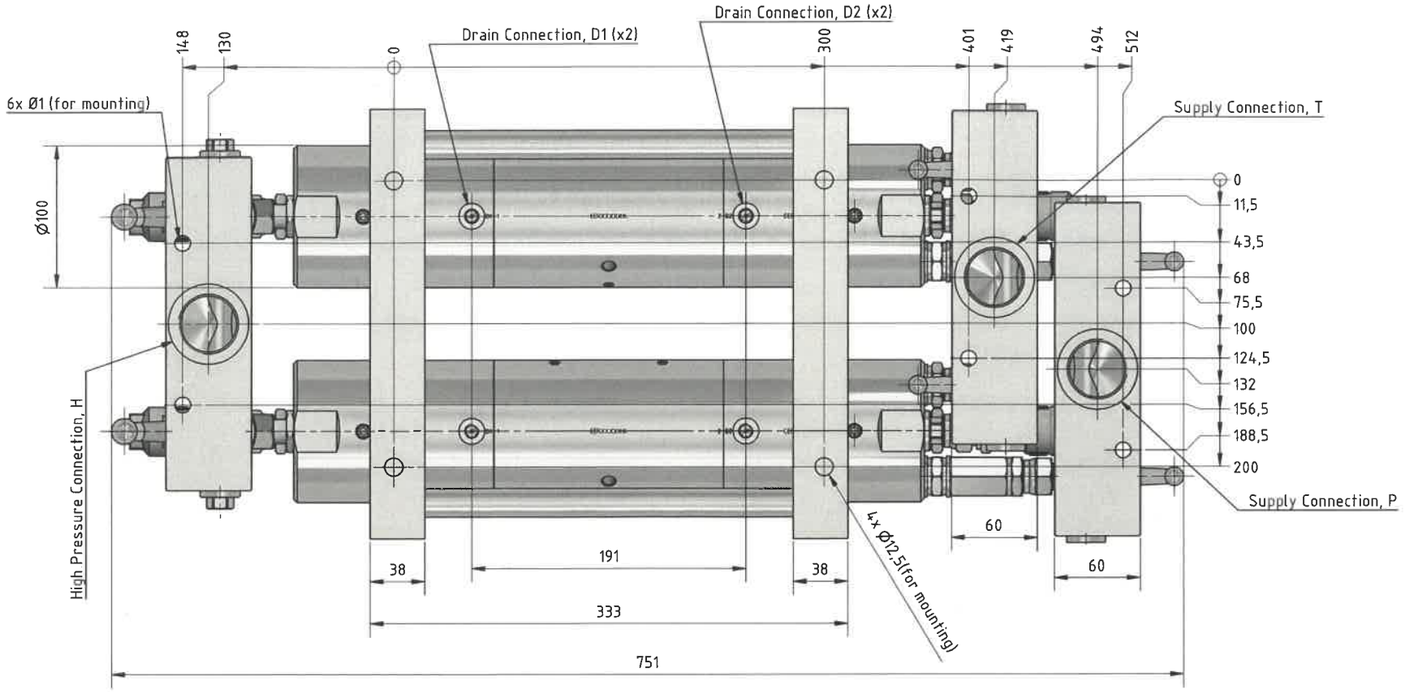

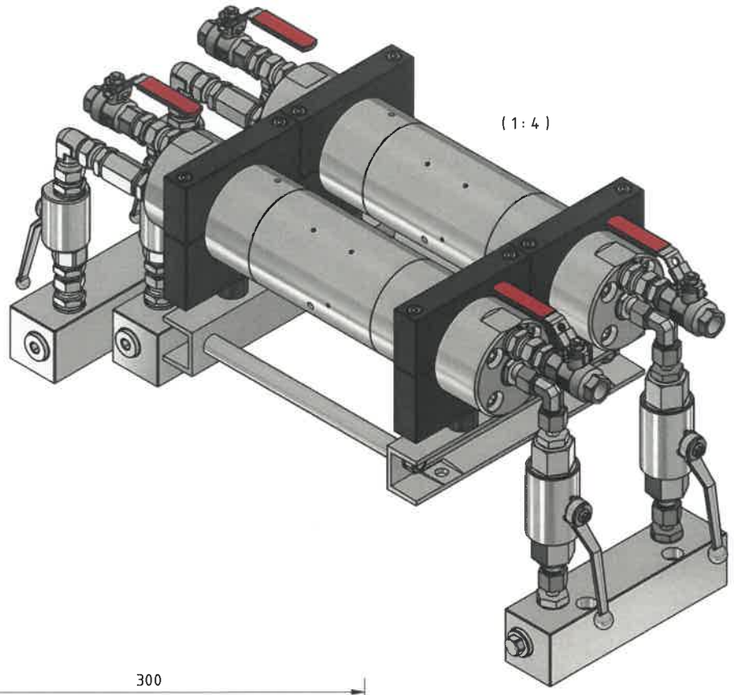

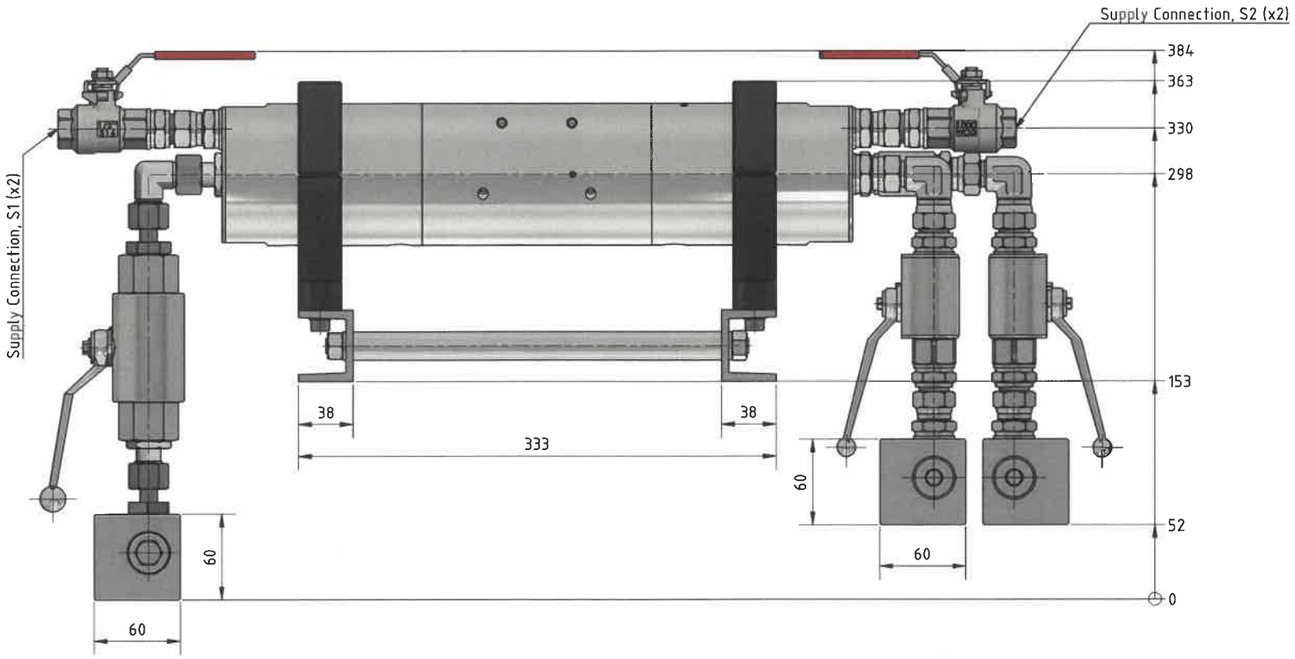

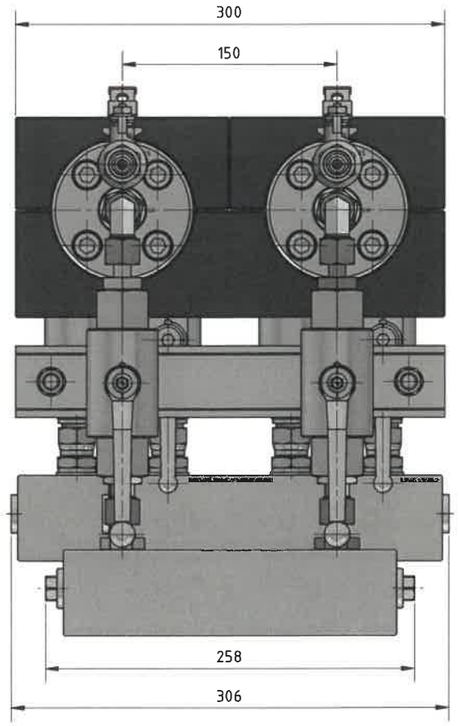

Function Diagram: 6D2W-107-0__

	Supply Connections, Media 1	Supply Connections, Media 2	High Pressure Connection	Drain Connections
	P & T	S1 & S2 (x3)	H1	D1 & D2 (x3)
1	1 1/4" BSPP	1/2" BSPP	1 1/4" BSPP	1/8" BSPP

Material			Issue	Material Code No.
Changes		Date	Name	Finish
				Break all edges
				Hardening depth
				HV
Designer	Peter Wasmer	Scale 1:3	2x HC6D2W in Parallel	Confidential: Property of miniBOOSTER HYDRAULICS A/S Denmark. Not to be handed over to, copied or used by third party. miniBOOSTER® HYDRAULICS A/S
Approved by		Format A2	P2W-HC6D2W-__.__-A-1__	
Date	19-02-2025		Assembly Drawing	Drawing No.: 6D2W-127-00